Form No. 3423-736 Rev B

SnowMaster® 724 QXE and 824 QXE Snowthrower

Model No. 36002—Serial No. 404310000 and Up

Model No. 36003—Serial No. 404310000 and Up

Operator's Manual

Introduction

This machine is intended to be used by residential homeowners. It is designed primarily for removing snow from paved surfaces, such as driveways and sidewalks, and other surfaces for traffic on residential or commercial properties. It is not designed for removing materials other than snow, nor is it designed for clearing gravel surfaces.

Read this information carefully to learn how to operate and maintain your product properly and to avoid injury and product damage. You are responsible for operating the product properly and safely.

You may contact Toro directly at www.Toro.com for product safety and operation training materials, accessory information, help finding a dealer, or to register your product.

Whenever you need service, genuine Toro parts, or additional information, contact an Authorized Service Dealer or Toro Customer Service and have the model and serial numbers of your product ready. Figure 1 identifies the location of the model and serial numbers on the product. Write the numbers in the space provided.

Important: **With your mobile device, you can scan the QR code on the serial number decal (if equipped) to access warranty, parts, and other product information.**

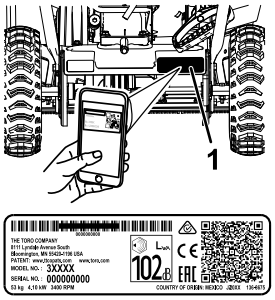

g219966

Figure 1

1. Model and serial number location

Model No. _____

Serial No. _____

This manual identifies potential hazards and has safety messages identified by the safety-alert symbol (Figure 2), which signals a hazard that may cause serious injury or death if you do not follow the recommended precautions.

g000502

Figure 2

Safety-alert symbol

This manual uses 2 words to highlight information. **Important** calls attention to special mechanical information and **Note** emphasizes general information worthy of special attention.

Important: **If you are using this machine above 1500 m (5,000 ft) for a continuous period, ensure that the High Altitude Kit has been installed so that the engine meets CARB/EPA emission regulations. The High Altitude Kit increases engine performance while preventing spark-plug fouling, hard starting, and increased emissions. Once you have installed the kit, attach the high-altitude label next to the serial decal on the machine. Contact any Authorized Toro Service Dealer to obtain the proper High Altitude Kit and high-altitude label for your machine. To locate a dealer convenient to you, access our website at www.Toro.com or contact our Toro Customer Care Department at the number(s) listed in your Emission Control Warranty Statement. Remove the kit from the engine and restore the engine to its original factory configuration when running the engine under 1500 m (5,000 ft). Do not operate an engine that has been converted for high-altitude use at lower altitudes; otherwise, you could overheat and damage the engine.**

If you are unsure whether or not your machine has been converted for high-altitude use, look for the following label (Figure 3).

© 2018—The Toro® Company
8111 Lyndale Avenue South
Bloomington, MN 55420

Register at www.Toro.com.

Original Instructions (EN)
Printed in Mexico
All Rights Reserved

3423-736 B

NOTE: THE ENGINE ON THIS PRODUCT HAS BEEN MODIFIED FOR USE AT ABOVE 5,000 FEET ELEVATION. IF USING BELOW 5,000 FEET, IT MUST BE REVISED BACK TO ORIGINAL SPECIFICATIONS.

127-9363

decal127-9363

Figure 3

⚠ WARNING

CALIFORNIA
Proposition 65 Warning

The engine exhaust from this product contains chemicals known to the State of California to cause cancer, birth defects, or other reproductive harm.

Use of this product may cause exposure to chemicals known to the State of California to cause cancer, birth defects, or other reproductive harm.

Contents

Introduction 1
Safety 3
General Safety 3
Safety and Instructional Decals 3
Setup 5
1 Unfolding the Handle 5
2 Installing the Discharge Chute 5
3 Installing the Chute-Control Rod 5
4 Checking the Engine-Oil Level 6
5 Adjusting the Tire Pressure 6
Product Overview 8
Specifications 8
Attachments/Accessories 8
Operation 8
Before Operation 8
Before Operation Safety 8
Filling the Fuel Tank 9
Checking the Engine-Oil Level 10
During Operation 10
During Operation Safety 10
Starting the Engine 11
Engaging the Auger 11
Disengaging the Auger 11
Self-Propelling the Machine 12
Shutting Off the Engine 12
Operating the Quick Stick® 12
Clearing a Clogged Discharge Chute 12
Operating Tips 13
After Operation 13
After Operation Safety 13
Preventing Freeze-up after Use 13
Maintenance 14
Recommended Maintenance Schedule(s) 14
Maintenance Safety 14
Checking and Adjusting the Skids 14
Inspecting the Throwing Edges 15
Changing the Engine Oil 16
Replacing the Spark Plug 17
Adjusting the Auger Cable 17
Adjusting the Transmission Cable 18
Storage 19
Storing the Machine 19

Safety

This snowthrower is capable of injuring hands and feet and of throwing objects. Failure to observe the following safety instructions could result in serious injury.

This machine complies with ANSI/OPEI B71.3 specifications.

General Safety

- Read and understand the contents of this *Operator's Manual* before you start the engine. Ensure that everyone using this product knows how to use it, knows how to shut off the engine quickly, and understands the warnings.
- Shut off the engine whenever you leave the operating position for any reason.
- Do not put your hands or feet near moving parts on the machine.
- Do not operate the machine without all guards and other safety protective devices in place and working.
- Keep clear of any discharge opening. Keep bystanders, especially small children, out of the operating area.
- Never allow children to operate the machine.

Safety and Instructional Decals

Safety decals and instructions are easily visible to the operator and are located near any area of potential danger. Replace any decal that is damaged or missing.

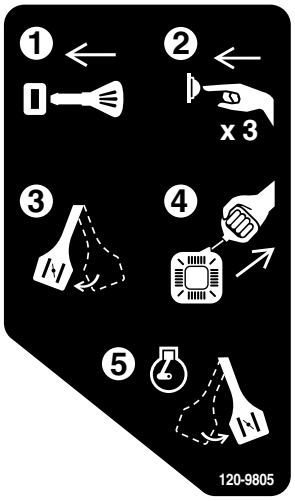

decal120-9805

120-9805

1. Insert the key.
2. Prime the engine 3 times.
3. Engage the choke.
4. Pull the starter cord.
5. Once the engine is running, disengage the choke.

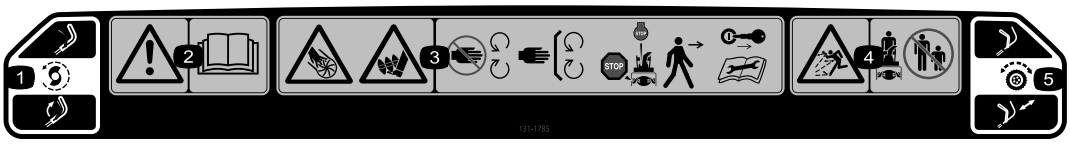

decal131-1785

131-1785

1. Auger drive—squeeze the lever to engage; release the lever to disengage.
2. Warning—read the *Operator's Manual*.
3. Cutting/dismemberment hazards of hand or foot, impeller and auger—stay away from moving parts; keep all guards and shields in place; shut off the engine and wait for the auger to stop before leaving the machine; remove the ignition key and read the instructions before servicing or performing maintenance.
4. Thrown object hazard—keep bystanders a safe distance away from the machine.
5. Self-propel drive—push down on the handle to engage the self-propel drive.

decal131-5914

131-5914

Order Part No. 131-5915

1. Cutting/dismemberment hazards of hand or foot, impeller and auger—do not place your hand in the chute; remove the ignition key and read the instructions before servicing or performing maintenance.

decal133-8061

133-8061

Setup

1

Unfolding the Handle

No Parts Required

Procedure

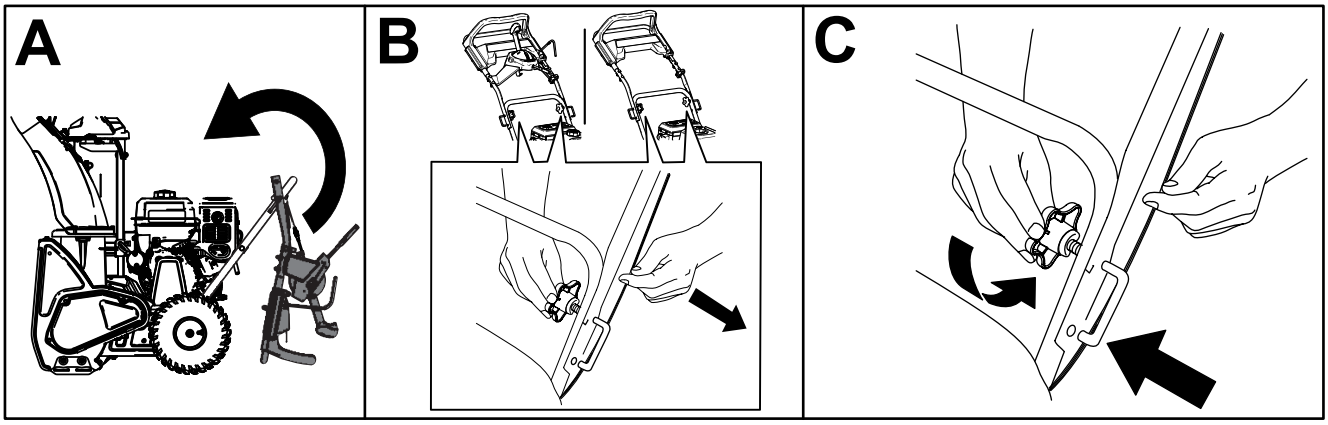

g257569

2

Installing the Discharge Chute

No Parts Required

Procedure

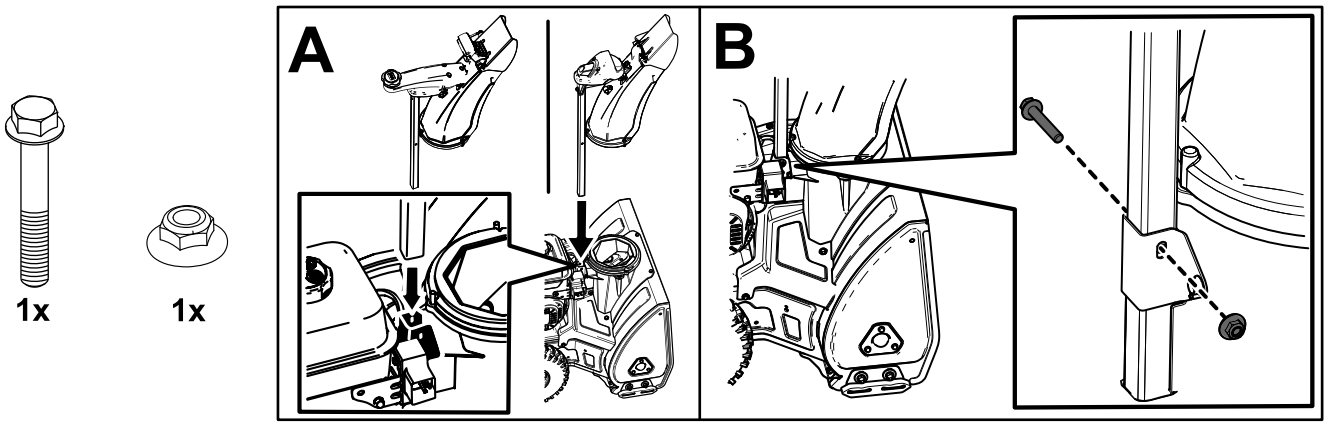

g257570

3

Installing the Chute-Control Rod

No Parts Required

Procedure

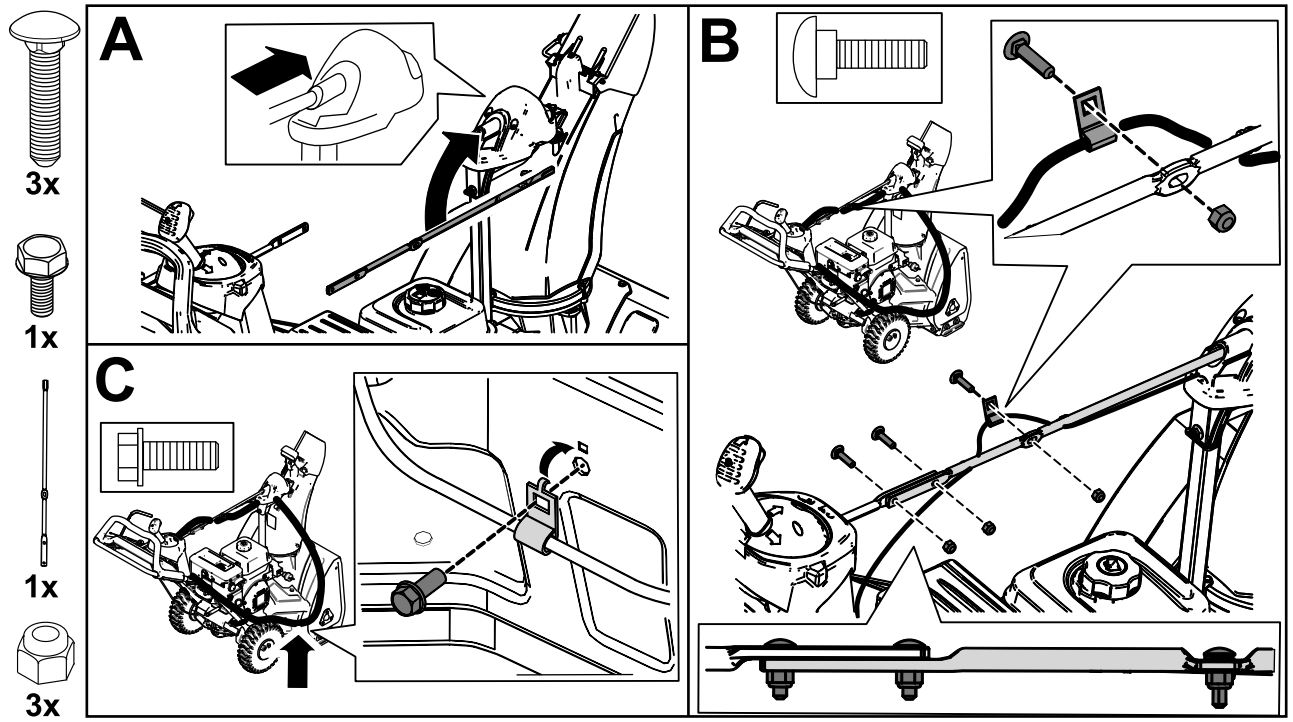

g257571

4

Checking the Engine-Oil Level

No Parts Required

Procedure

Note: Your machine comes with oil in the engine crankcase. Before starting the engine, check the oil level and add oil if necessary.

Refer to Checking the Engine-Oil Level (page 10).

5

Adjusting the Tire Pressure

No Parts Required

Procedure

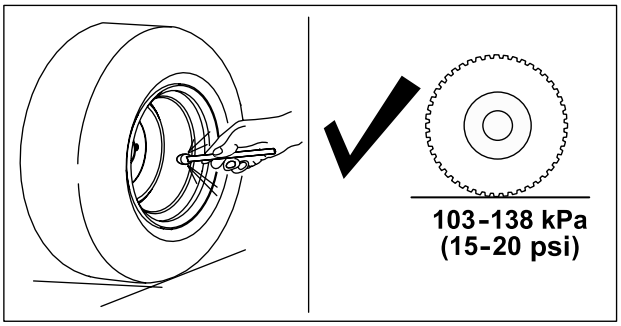

g211051

Product Overview

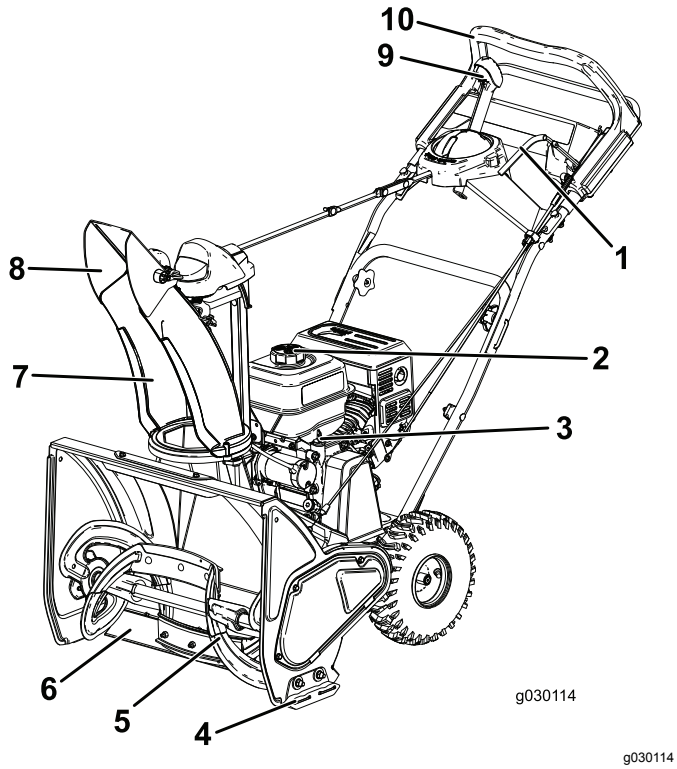

g030114

Figure 8

1. Auger lever
2. Fuel-tank cap
3. Dipstick
4. Skid (2)
5. Auger
6. Scraper
7. Discharge chute
8. Chute deflector
9. Quick Stick® discharge-chute control
10. Upper handle

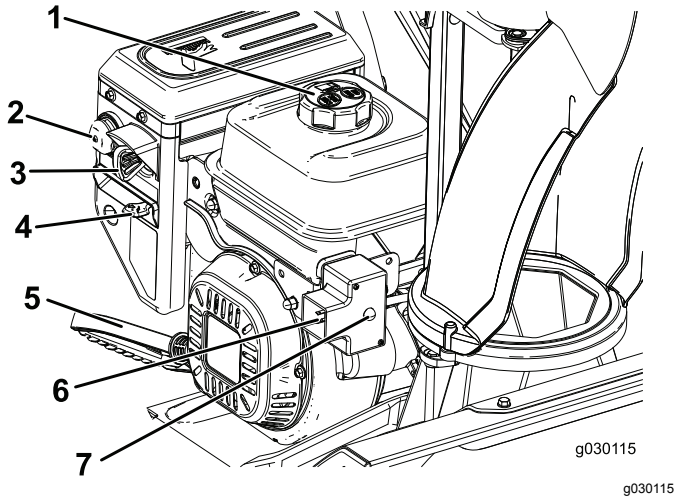

g030115

Figure 9

1. Fuel-tank cap
2. Primer
3. Ignition key
4. Choke
5. Recoil-start handle
6. Electric-start plug-in
7. Electric-start button

Specifications

Model	Weight	Length	Width	Height
36002	56.7 kg (125 lb)	132 cm (52 inches)	65 cm (25 inches)	108 cm (43 inches)
36003	59.4 kg (131 lb)			

Attachments/Accessories

A selection of Toro approved attachments and accessories is available for use with the machine to enhance and expand its capabilities. Contact your Authorized Service Dealer or authorized Toro distributor or go to www.Toro.com for a list of all approved attachments and accessories.

To ensure optimum performance and continued safety certification of the machine, use only genuine Toro replacement parts and accessories. Replacement parts and accessories made by other manufacturers could be dangerous, and such use could void the product warranty.

Operation

Note: Determine the left and right sides of the machine from the normal operating position.

Before Operation

Before Operation Safety

General Safety

- **For electric-start models only:** Use extension cords and receptacles as specified in the manual. Inspect the electrical cord before plugging it into a power source. If the cord is damaged, replace it. Unplug the power cord whenever you are not starting the machine.
- Wear appropriate clothing, including eye protection; long pants; substantial, slip-resistant footwear; and hearing protection. Tie back long hair, secure loose clothing, and do not wear loose jewelry.
- Thoroughly inspect the area where you will use the machine, and remove all doormats, sleds, boards, wires, and other foreign objects.
- If a shield, safety device, or decal is damaged, illegible, or missing, repair or replace it before

beginning operation. Also, tighten any loose fasteners.

- **Two-stage models only:** Adjust the collector housing height to clear a gravel or crushed-rock surface.

Fuel Safety

Fuel is extremely flammable and explosive. A fire or explosion from fuel can burn you and others.

- To prevent a static charge from igniting the fuel, place the container and/or machine on the ground before filling, not in a vehicle or on an object.
- Fill the fuel tank outdoors when the engine is cold. Replace the fuel cap securely and wipe up spills.
- Do not handle fuel when smoking or around an open flame or sparks.
- Store fuel in an approved fuel container, out of the reach of children.
- When fuel is in the tank, tip the machine only as directed in the instructions.
- If you spill fuel on your clothing, change your clothing immediately.

Filling the Fuel Tank

- For best results, use only clean, fresh (less than 30 days old), unleaded gasoline with an octane rating of 87 or higher ((R+M)/2 rating method).
- Oxygenated fuel with up to 10% ethanol or 15% MTBE by volume is acceptable.
- **Do not** use ethanol blends of gasoline (such as E15 or E85) with more than 10% ethanol by volume. Performance problems and/or engine damage may result which may not be covered under warranty.
- **Do not** use gasoline containing methanol.
- **Do not** store fuel either in the fuel tank or fuel containers over the winter unless you use a fuel stabilizer.
- **Do not** add oil to gasoline.

Do not fill above the bottom of the fuel tank neck (Figure 10).

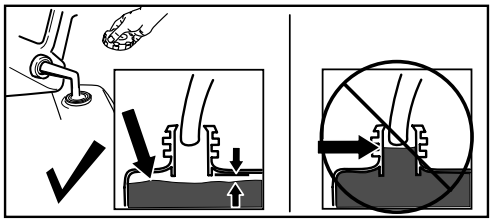

g216203

Figure 10

Important: **For best results, purchase only the quantity of fuel that you expect to use in 30 days. Otherwise, you may use fuel stabilizer/conditioner in the machine at all times to keep the fuel fresh longer when used as directed by the fuel-stabilizer manufacturer.**

Checking the Engine-Oil Level

Service Interval: Before each use or daily

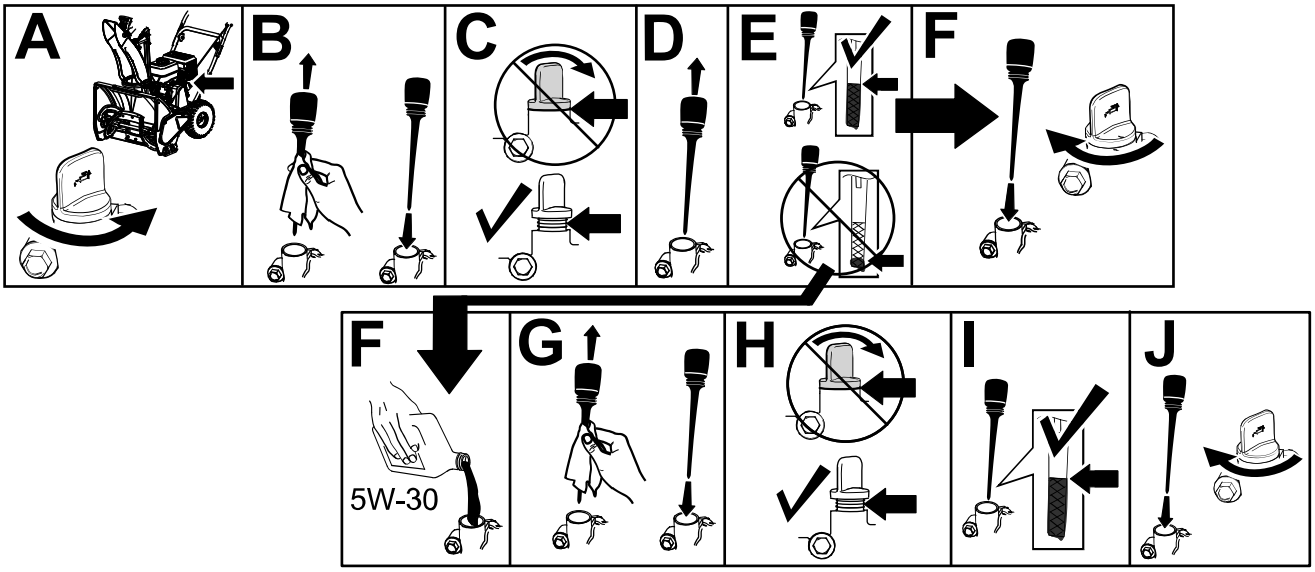

g257572

Figure 11

During Operation

During Operation Safety

General Safety

- **Shut off the engine before unclogging the machine and always use a stick or the snow-cleanout tool (if provided).**
- Stay behind the handles and away from the discharge opening while operating the machine. **Keep your face, hands, feet, and any other part of your body or clothing away from moving or rotating parts.**
- Never direct the discharge toward people or areas where property damage can occur.
- Use your full attention while operating the machine. Do not engage in any activity that causes distractions; otherwise, injury or property damage may occur.
- Exercise caution to avoid slipping or falling, especially when operating the machine in reverse.
- Always be sure of your footing, and keep a firm hold on the handles. Walk; never run.
- Exercise extreme caution when operating the machine on a slope.
- Do not operate the machine without good visibility or light.
- Look behind and use care when backing up the machine.
- When not actively clearing snow, disengage power to the auger.
- Exercise extreme caution when operating the machine on or crossing gravel drives (2-stage models only), walks, or roads. Stay alert for hidden hazards or traffic.
- Never attempt to make any adjustments while the engine is running, except as directed in the instructions.
- After striking a foreign object, shut off the engine, remove the ignition key (electric-start models only), inspect the machine for damage. Repair any damage before starting the machine.
- If the machine starts to vibrate abnormally, shut off the engine and check immediately for the cause.
- Do not run the engine indoors; exhaust fumes are dangerous.
- Do not overload the machine capacity by attempting to clear snow at too fast a rate.
- Disengage all clutches and shift into neutral before starting the engine.
- Shut off the engine whenever you leave the operating position, before clearing or unclogging the collector, impeller, or discharge chute, and when making any repairs, adjustments, or inspections.
- Never operate the machine at high transport speeds on slippery surfaces.

Starting the Engine

Using the Electric Starter

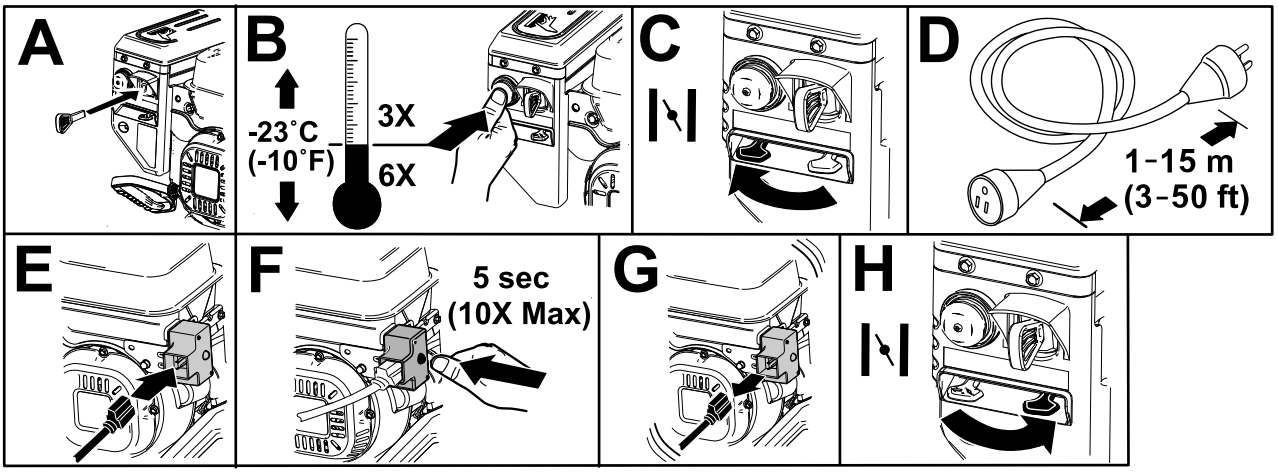

g261846

Using the Recoil Starter

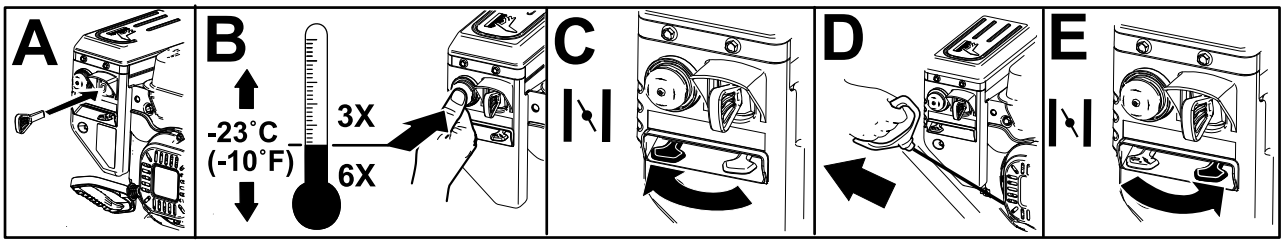

g261847

Engaging the Auger

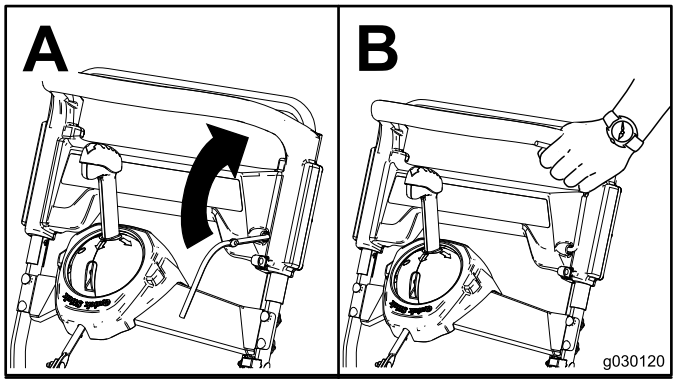

g030120

Figure 14

Disengaging the Auger

To disengage the auger, release the auger lever.

Self-Propelling the Machine

To operate the self-propel drive, simply walk with your hands on the upper handle and your elbows at your sides, and the machine automatically keeps pace with you (Figure 15).

Note: You can self-propel the machine with the auger engaged or disengaged.

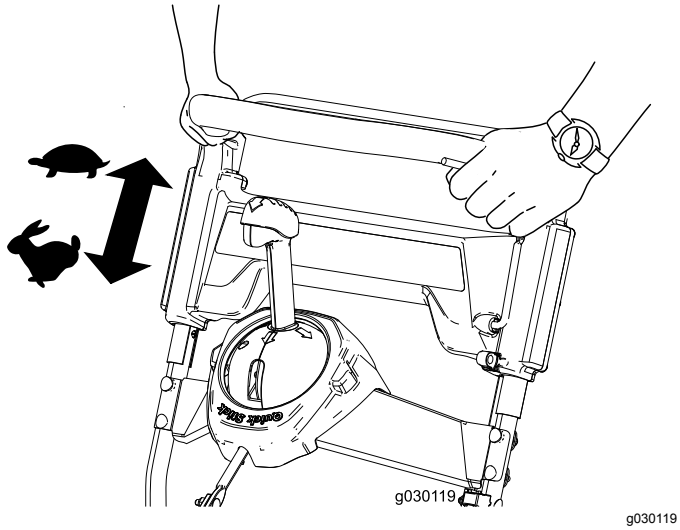

Figure 15

Shutting Off the Engine

To shut off the engine, remove the key from the ignition or move the key to the middle position.

Operating the Quick Stick®

Note: Fully press the blue knob to release the latch and operate the Quick Stick®.

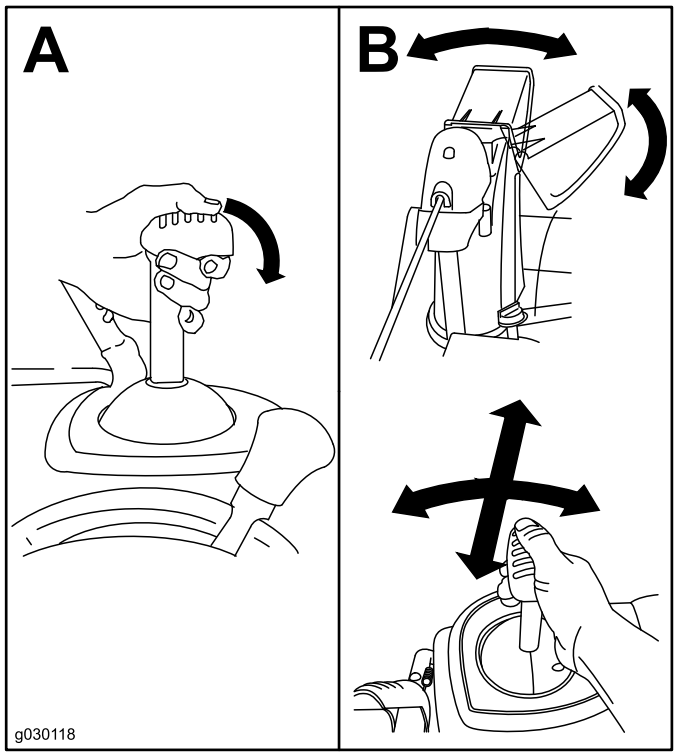

Figure 16

Clearing a Clogged Discharge Chute

⚠ WARNING

If the auger/impeller is running but there is no snow coming out of the discharge chute, the discharge chute may be clogged.

Never use your hands to clear a clogged discharge chute. This could result in personal injury.

1. While remaining in the operating position, release the self-propel handle.
2. Engage the auger.
3. Push down on the handle to raise the front of the machine a few centimeters (inches) off the pavement, then lift the handles quickly to bump the front of the machine onto the pavement.
4. Disengage the auger.
5. Repeat steps 1 through 4, if necessary, until a stream of snow comes out of the discharge chute.

Important: **If you cannot unclog the discharge chute by bumping the front of the machine, shut off the engine, wait for all moving parts to stop, and use a snow-cleanout tool (not included).**

Important: **Unclogging the discharge chute by bumping the front of the machine on the pavement may cause the skids to move. Adjust the skids and tighten the skid bolts securely; refer to** **Checking and Adjusting the Skids (page 14)****.**

Operating Tips

⚠ WARNING

The auger can throw stones, toys, and other foreign objects and cause serious personal injury to you or bystanders.

- **Keep the area to be cleared free of all objects that the rotor blades could pick up and throw.**
- **Keep all children and pets away from the area of operation.**

- Remove the snow as soon as possible after it falls.
- Overlap each swath to ensure complete snow removal.
- Discharge the snow downwind whenever possible.
- If the machine does not propel itself forward on slippery surfaces or in heavy snow, push forward on the handle, but allow the machine to work at its own pace.

After Operation

After Operation Safety

General Safety

- Never store the machine with fuel in the fuel tank inside a building where ignition sources are present, such as hot water heaters, space heaters, or clothes dryers. Allow the engine to cool before storing the machine in any enclosure.
- When storing the machine for more than 30 days, refer to Storage (page 19) for important information.
- Run the machine a few minutes after throwing snow to prevent freeze-up of the collector and impeller.

Preventing Freeze-up after Use

- Let the engine run for a few minutes to prevent moving parts from freezing. Shut off the engine, wait for all moving parts to stop, and remove ice and snow from the machine.
- Clean off any snow and ice from the base of the chute. Always use a tool to clean snow out of a chute, never use your hand.
- Rotate the discharge chute left and right to free it from any ice buildup.
- With the ignition key in the OFF position, pull the recoil-start handle several times or connect the electrical cord to a power source and the machine and push the electric-start button once to prevent the recoil starter and/or the electric starter from freezing up (electric-start models only).
- In snowy and cold conditions, some controls and moving parts may freeze. Do not use excessive force when trying to operate frozen controls. If you have difficulty operating any control or part, start the engine and let it run for a few minutes.
- Do not use the chute control to attempt to move a frozen discharge chute. Hold down the blue knob and use your hands to rotate the chute.
- Transporting the machine in an open trailer or vehicle can cause the controls or discharge chute to freeze.

Maintenance

Recommended Maintenance Schedule(s)

Maintenance Service Interval	Maintenance Procedure
After the first hour	• Check for loose fasteners and tighten them if necessary.
After the first 2 hours	• Change the engine oil. • Inspect the auger cable and adjust it if necessary. • Inspect the transmission cable and adjust it if necessary.
Before each use or daily	• Check the engine-oil level and add oil if necessary.
Every 100 hours	• Replace the spark plug.
Yearly	• Check the skids and adjust them if necessary. • Inspect the throwing edges and have an Authorized Service Dealer replace the throwing edges and scraper if necessary. • Change the engine oil. • Inspect the auger cable and adjust it if necessary. • Inspect the transmission cable and adjust it if necessary. • Check for loose fasteners and tighten them if necessary. • Have an Authorized Service Dealer inspect the drive belt and replace it if necessary.
Yearly or before storage	• Prepare the machine for storage.

Maintenance Safety

Read the following safety precautions before performing any maintenance on the machine:

- Before servicing, adjusting, or cleaning the machine, shut off the engine and remove the key. If major repairs are ever needed, contact an Authorized Service Dealer.
- Always wear eye protection while performing an adjustment or repair to protect your eyes from foreign objects that the machine may throw.
- Check all fasteners at frequent intervals for proper tightness to ensure that the machine is in safe working condition.
- Do not change the governor settings on the engine.

  Purchase only genuine Toro replacement parts and accessories.

Checking and Adjusting the Skids

Service Interval: Yearly

Check the skids to ensure that the auger does not contact the paved surface. Adjust the skids as needed to compensate for wear (Figure 17).

1. Loosen the skid bolts.
2. Slide a 5 mm (3/16 inch) board underneath the scraper.

   Note: Using a thinner board results in a more aggressive scraper; using a thicker board results in a less aggressive scraper.
3. Lower the skids to the ground.

   Note: Ensure that the skids are flat on the ground.
4. Tighten the skid bolts.

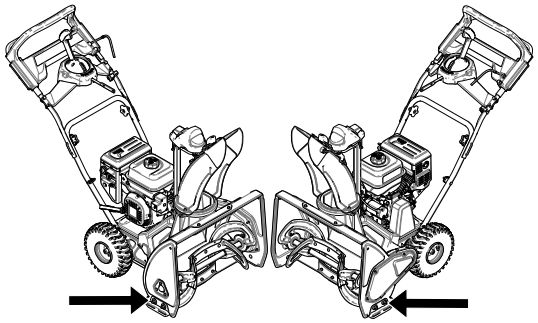

g218004

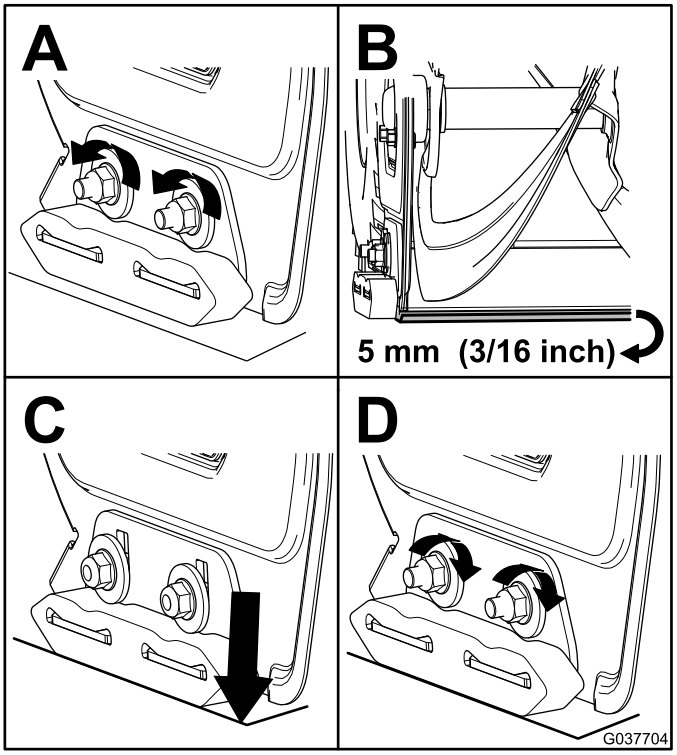

g037704

Figure 17

Inspecting the Throwing Edges

Service Interval: Yearly—Inspect the throwing edges and have an Authorized Service Dealer replace the throwing edges and scraper if necessary.

Before each session, inspect the throwing edges for wear. When a throwing edge has worn down to the wear-indicator hole, have an Authorized Service Dealer replace the throwing edges (Figure 18).

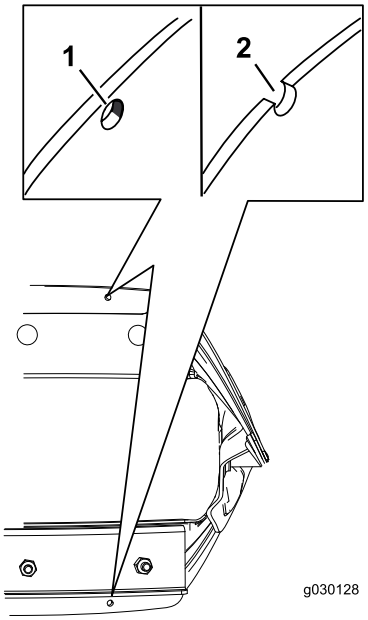

g030128

Figure 18

1. The wear-indicator hole is intact; you do not need to replace the throwing edges.
2. The wear-indicator hole is exposed; replace both throwing edges.

Changing the Engine Oil

Service Interval: After the first 2 hours

Yearly

If possible, run the engine for a few minutes before changing the oil to warm it. Warm oil flows better and carries more contaminants.

Engine Oil Specifications

Engine oil capacity	Model 36002: 0.50 L (17 fl oz); Model 36003: 0.59 L (20 fl oz)
Oil viscosity	Refer to Figure 19.
API service classification	SJ or higher

Use Figure 19 to select the best oil viscosity for the outdoor temperature range expected:

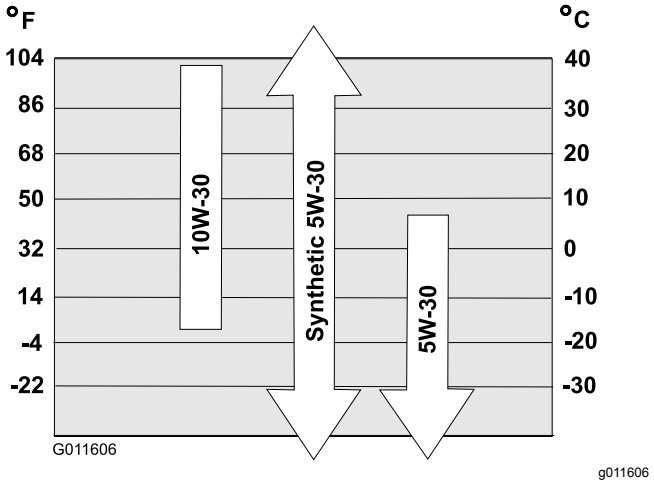

Figure 19

1. Move the machine to a level surface.
2. Place an oil-drain pan under the oil-drain plug, remove the oil-drain plug, and tip the machine backward and drain the used oil in the oil-drain pan (Figure 20).

   Note: Dispose of the used oil properly at a local recycling center.

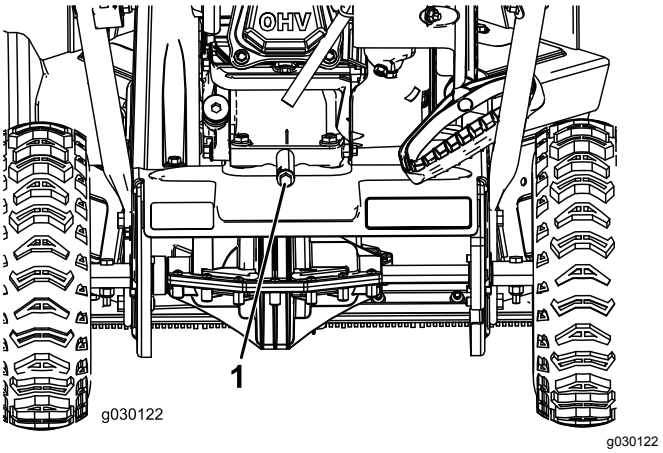

Figure 20

1. Oil-drain plug

3. After draining the used oil, return the machine to the operating position.
4. Install the oil-drain plug and tighten it securely.
5. Clean around the oil-fill cap.
6. Fill the crankcase will oil.

Replacing the Spark Plug

Service Interval: Every 100 hours—Replace the spark plug.

⚠ WARNING

Replacing the spark plug while the engine is hot can result in burns.

Wait until the engine is cool to replace the spark plug.

Use a Toro spark plug or equivalent (Champion® RN9YC or NGK BPR6ES).

1. Remove the boot (Figure 21).

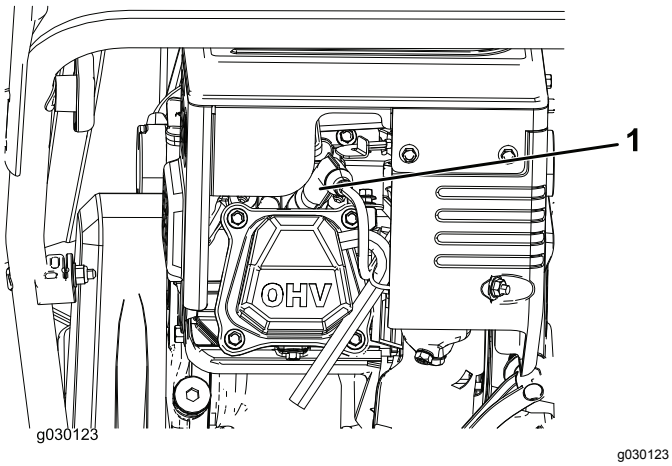

Figure 21

1. Spark-plug boot

2. Clean around the base of the spark plug.
3. Remove and discard the old spark plug.

   Note: You will need a ratchet wrench extension to remove the spark plug.

4. Set the gap between the electrodes on a new spark plug at 0.76 mm (0.030 inch) as shown in Figure 22.

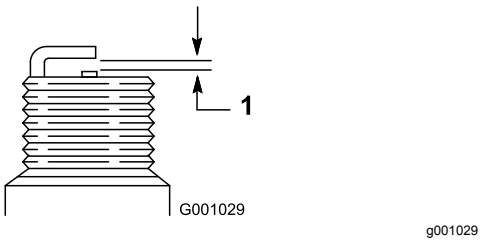

Figure 22

1. 0.76 mm (0.030 inch)

Adjusting the Auger Cable

Service Interval: After the first 2 hours

Yearly

If the drive belt slips or squeals under a heavy load, adjust the auger cable.

1. Loosen the nut on the lower cable clamp, but do not remove it (Figure 23).

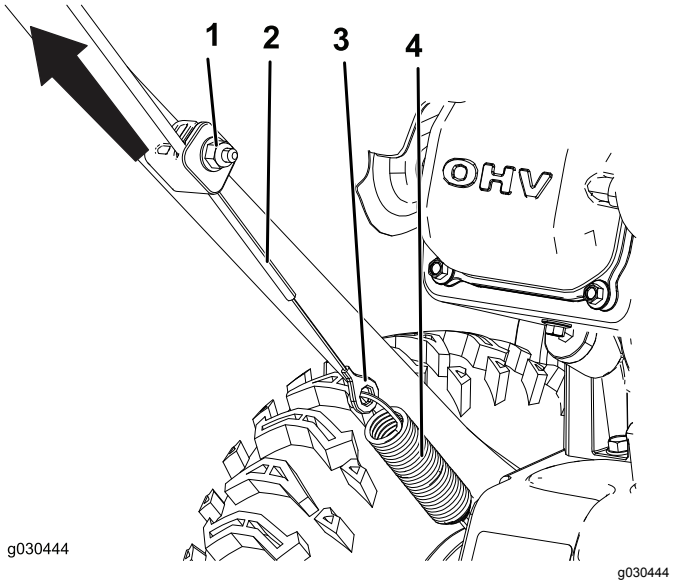

Figure 23

1. Nut
2. Cable
3. Connector
4. Spring

2. Pull the cable up to remove some slack (Figure 23).

   Important: **Do not remove all the slack from the cable. Removing all the slack from the cable prevents the auger from stopping properly.**

3. Hold the cable in place and tighten the nut (Figure 23).

Adjusting the Transmission Cable

Service Interval: After the first 2 hours

Yearly

If the wheels easily stall out, or if the wheels drive without engaging the self-propel handle, adjust the transmission cable.

1. Loosen the nut on the upper cable clamp, but do not remove it (Figure 24).

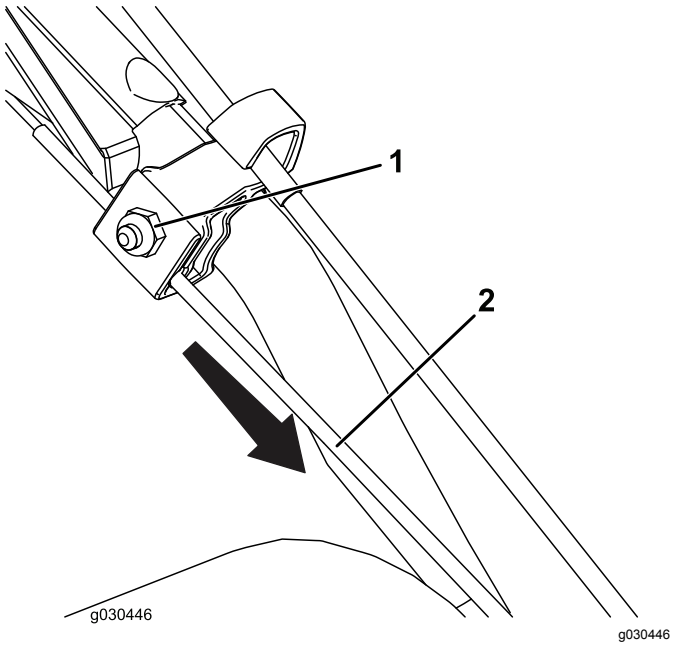

Figure 24

1. Nut
2. Cable

2. Pull the cable down to remove most of the slack in the cable (Figure 24).

   Important: **Do not remove all the slack from the cable. Removing all the slack from the cable may cause the wheels to engage without engaging the self-propel handle.**

3. Tighten the nut (Figure 24).

Storage

Storing the Machine

⚠ WARNING

Fuel fumes are highly flammable, explosive, and dangerous if inhaled. If you store the product in an area with an open flame, the fuel fumes may ignite and cause an explosion.

- **Do not store the machine in a house (living area), basement, or any other area where ignition sources may be present, such as hot water and space heaters, clothes dryers, furnaces, and other appliances.**
- **Do not tip the machine either forward or backward with fuel in the fuel tank; otherwise, fuel may leak out of the machine.**
- **Do not store the machine with its handle tipped down onto the ground; otherwise, oil leaks into the engine cylinder and onto the ground, and the engine does not start or run.**

1. On the last refueling of the season, add fuel stabilizer to fresh fuel as directed by the fuel-stabilizer manufacturer.

   Important: **Do not store fuel longer than that suggested by the fuel-stabilizer manufacturer.**
2. Run the engine for 10 minutes to distribute the conditioned fuel through the fuel system.
3. Shut off the engine, allow it to cool, and siphon the fuel tank or run the engine until it shuts off.
4. Start the engine and run it until it shuts off.
5. Choke or prime the engine, start it a third time, and run the engine until it does not start.
6. Drain the fuel in the carburetor through the carburetor-drain bolt into an approved gasoline container.
7. Dispose of unused fuel properly. Recycle it according to local codes, or use it in your automobile.
8. While the engine is still warm, change the engine oil. Refer to Changing the Engine Oil (page 16).
9. Remove the spark plug.
10. Squirt 10 ml (2 tsp) of oil into the spark-plug hole.
11. Install the spark plug by hand and then torque it to 27 to 30 N·m (20 to 22 ft-lb).
12. With the ignition key removed, pull the recoil-start handle slowly to distribute the oil on the inside of the cylinder.
13. Clean the machine.
14. Touch up chipped surfaces with paint available from an Authorized Service Dealer. Sand affected areas before painting, and use a rust preventative to prevent the metal parts from rusting.
15. Tighten any loose fasteners. Repair or replace any damaged parts.
16. Cover the machine and store it in a clean, dry place out of the reach of children. Allow the engine to cool before storing the machine in any enclosure.

California Proposition 65 Warning Information

What is this warning?

You may see a product for sale that has a warning label like the following:

WARNING: Cancer and Reproductive Harm—www.p65Warnings.ca.gov.

What is Prop 65?

Prop 65 applies to any company operating in California, selling products in California, or manufacturing products that may be sold in or brought into California. It mandates that the Governor of California maintain and publish a list of chemicals known to cause cancer, birth defects, and/or other reproductive harm. The list, which is updated annually, includes hundreds of chemicals found in many everyday items. The purpose of Prop 65 is to inform the public about exposure to these chemicals.

Prop 65 does not ban the sale of products containing these chemicals but instead requires warnings on any product, product packaging, or literature with the product. Moreover, a Prop 65 warning does not mean that a product is in violation of any product safety standards or requirements. In fact, the California government has clarified that a Prop 65 warning "is not the same as a regulatory decision that a product is 'safe' or 'unsafe.'" Many of these chemicals have been used in everyday products for years without documented harm. For more information, go to https://oag.ca.gov/prop65/faqs-view-all.

A Prop 65 warning means that a company has either (1) evaluated the exposure and has concluded that it exceeds the "no significant risk level"; or (2) has chosen to provide a warning based on its understanding about the presence of a listed chemical without attempting to evaluate the exposure.

Does this law apply everywhere?

Prop 65 warnings are required under California law only. These warnings are seen throughout California in a wide range of settings, including but not limited to restaurants, grocery stores, hotels, schools, and hospitals, and on a wide variety of products. Additionally, some online and mail order retailers provide Prop 65 warnings on their websites or in catalogs.

How do the California warnings compare to federal limits?

Prop 65 standards are often more stringent than federal and international standards. There are various substances that require a Prop 65 warning at levels that are far lower than federal action limits. For example, the Prop 65 standard for warnings for lead is 0.5 µg/day, which is well below the federal and international standards.

Why don't all similar products carry the warning?

- Products sold in California require Prop 65 labelling while similar products sold elsewhere do not.
- A company involved in a Prop 65 lawsuit reaching a settlement may be required to use Prop 65 warnings for its products, but other companies making similar products may have no such requirement.
- The enforcement of Prop 65 is inconsistent.
- Companies may elect not to provide warnings because they conclude that they are not required to do so under Prop 65; a lack of warnings for a product does not mean that the product is free of listed chemicals at similar levels.

Why does Toro include this warning?

Toro has chosen to provide consumers with as much information as possible so that they can make informed decisions about the products they buy and use. Toro provides warnings in certain cases based on its knowledge of the presence of one or more listed chemicals without evaluating the level of exposure, as not all the listed chemicals provide exposure limit requirements. While the exposure from Toro products may be negligible or well within the "no significant risk" range, out of an abundance of caution, Toro has elected to provide the Prop 65 warnings. Moreover, if Toro does not provide these warnings, it could be sued by the State of California or by private parties seeking to enforce Prop 65 and subject to substantial penalties.